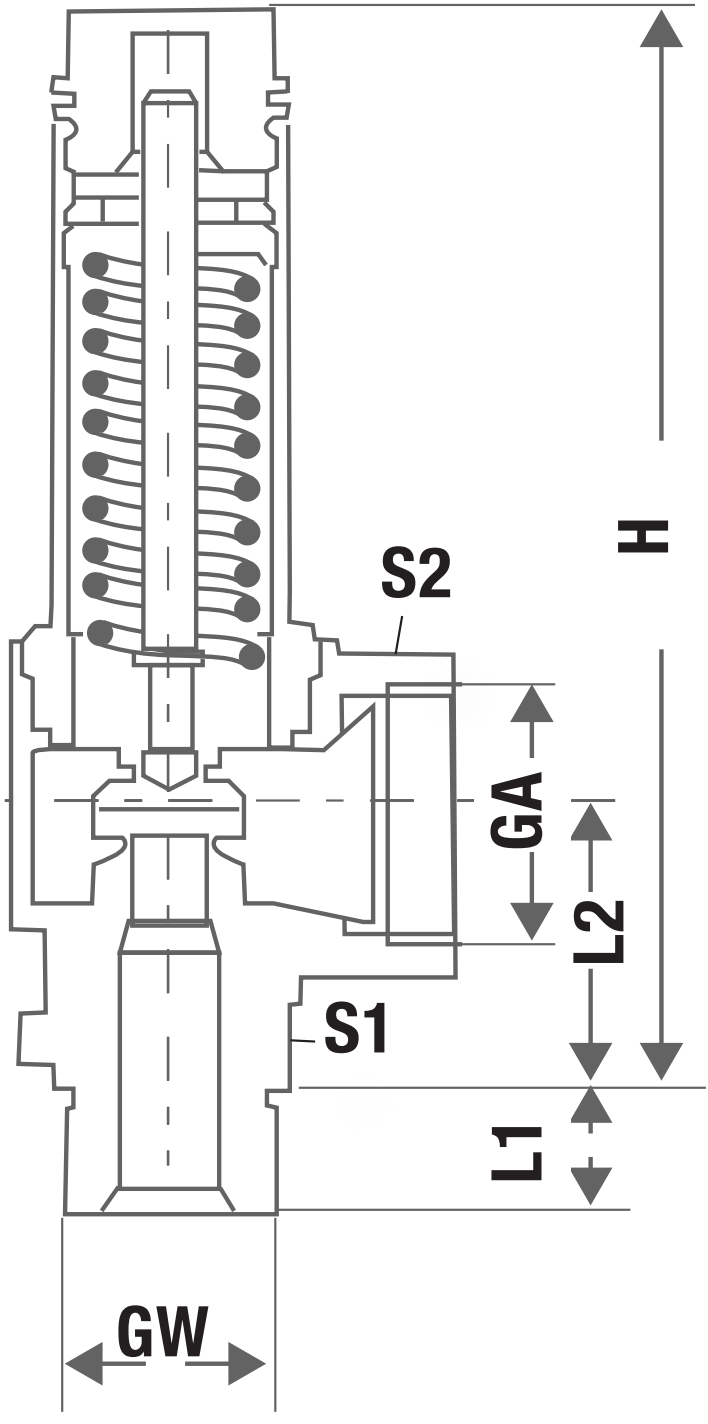
S2
S1
GW
GA
L2
L1
H